VERSION	A
STATUS	APPROVED
DATE	14.08.2025

WEIGHT	BRIMFUL	PRIME MATERIAL	RECYCLING %	DRAWN BY	DATE	FORMAT	SCALE
48 ± 2 g	± 530 ml	HDPE	n/a	hendrivanputten	14.08.2025	A3	1 : 2

Joh. Sieben GmbH seit 1875
Kunststoffverarbeitung
PART OF ALPI

Am Weidenhof 3
D-52525 Heinsberg
Germany
T +49 (0) 2452 689-0
E sieben@jskv.de
//jskv.de

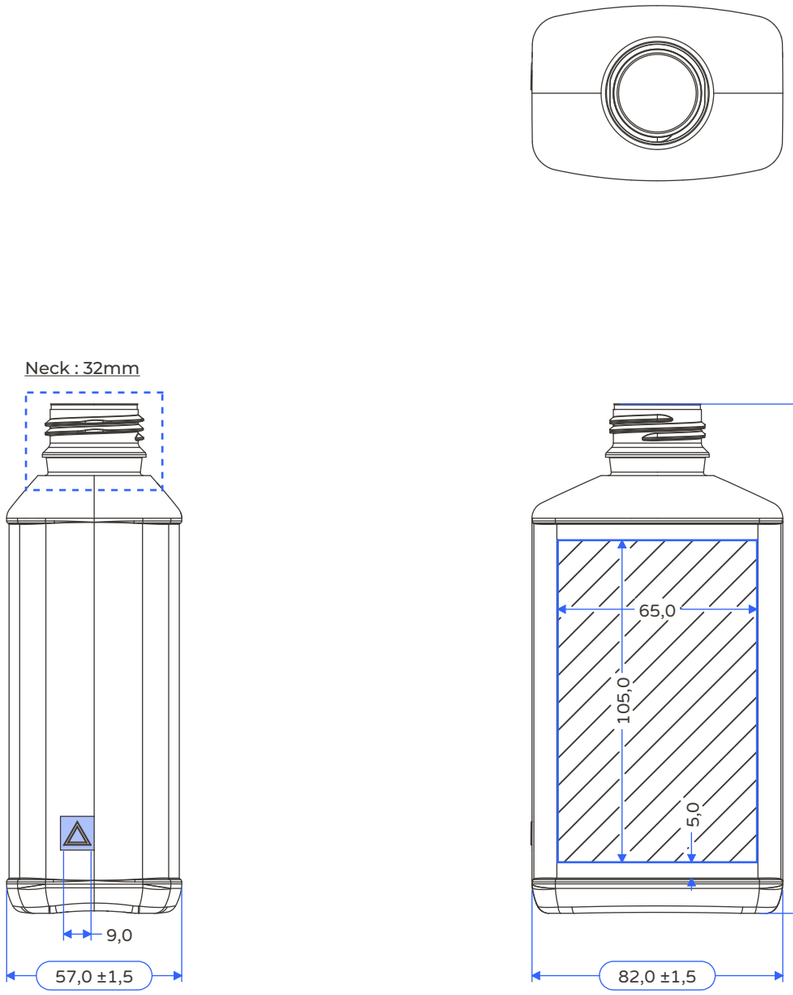

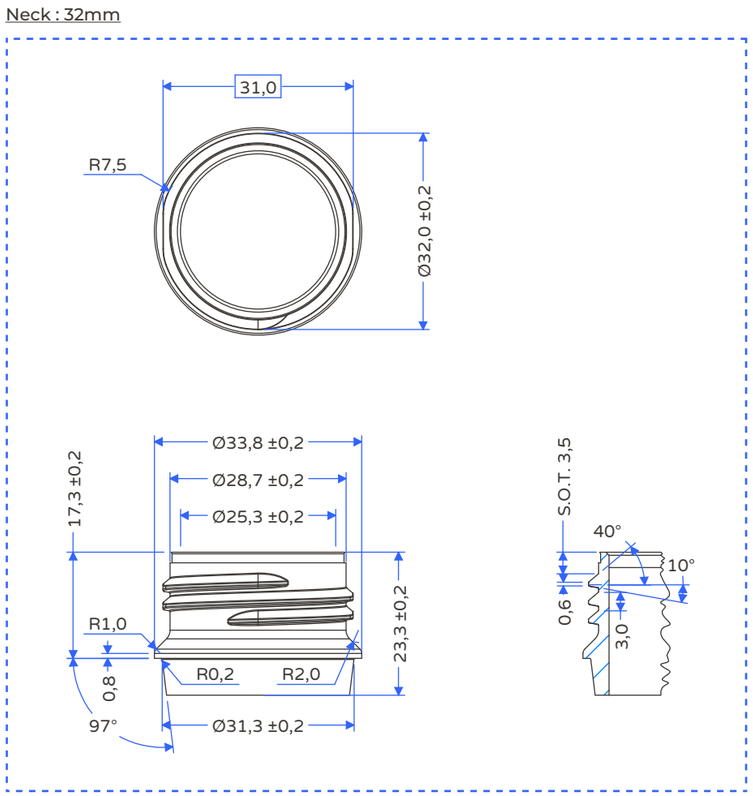

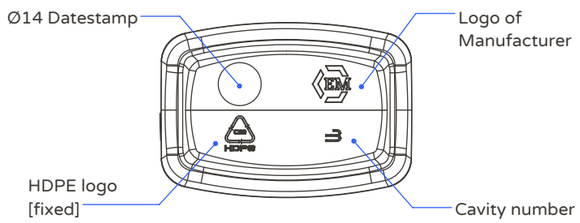

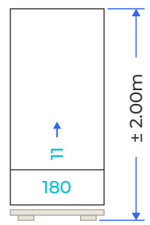

B0000.00 - POL 500 ml

Product sheet

UN approval | Food safe symbol | Recycled | Scale | Logo possibility | VISI line | Warning possibility | Euro pallet

- DIMENSIONS ARE IN MM
- TOLERANCES THAT ARE NOT SPECIFIED +|- 3MM
- THIS DRAWING IS PROPERTY OF JOHANN SIEBEN GMBH ANY INFORMATION CONTAINED HEREIN IS CONFIDENTIAL.